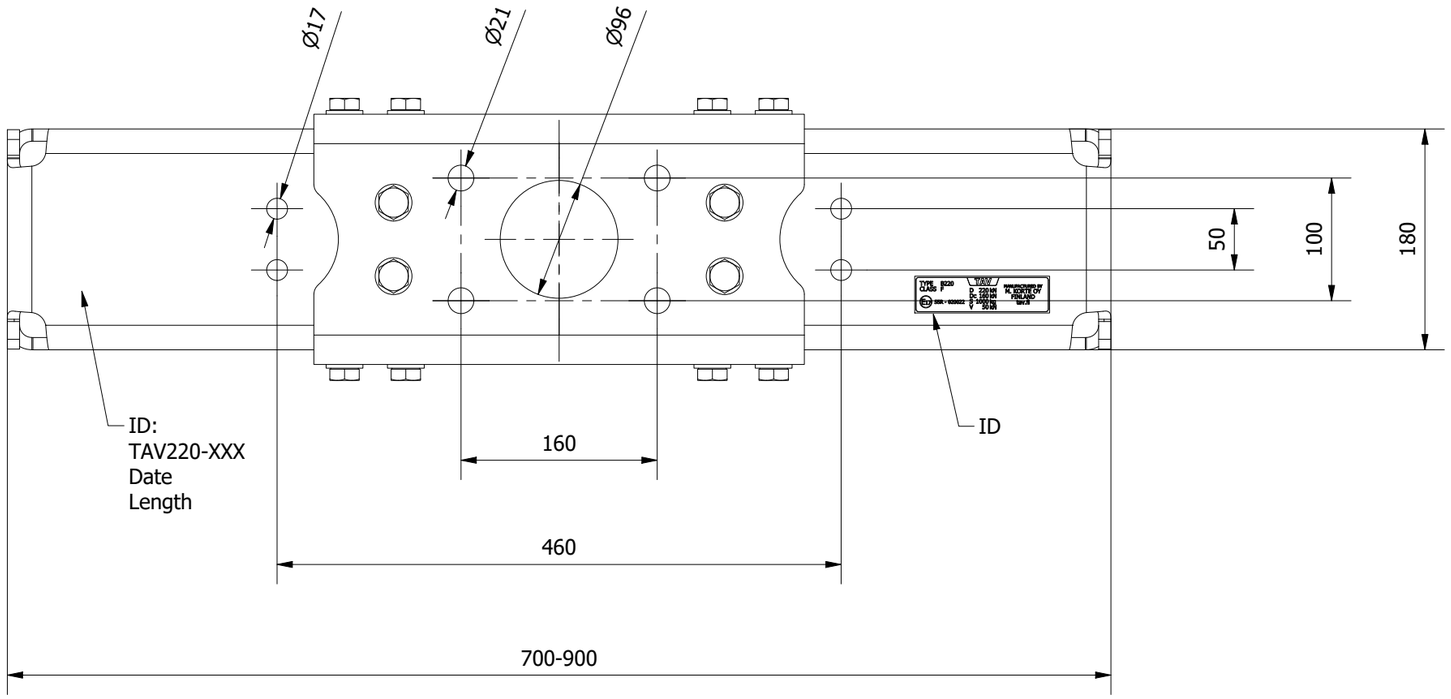

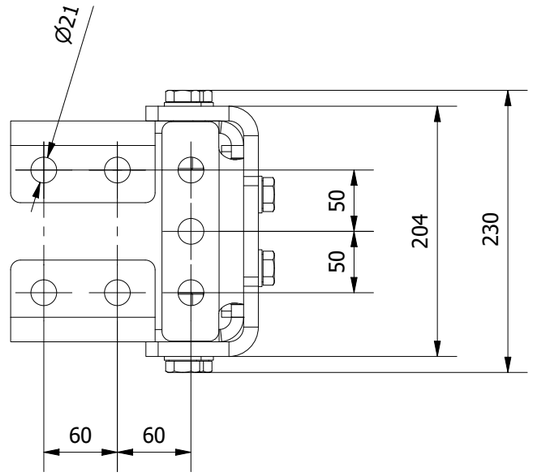

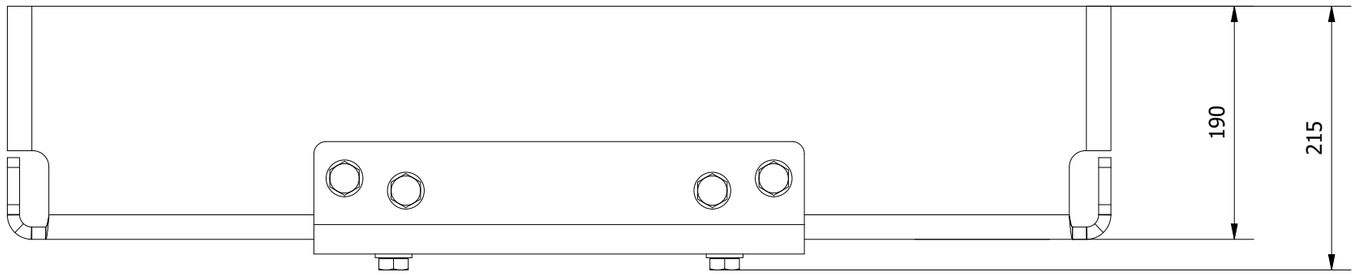

M. KORTE OY

TAV

SCALE:	SHEET SIZE:	PROJECTION:
1 : 5	A3	
DATE: 7.12.22	DESIGNER: 65	REVISION NUMBER: 1.0

DESCRIPTION:
TAV220 Drawbeam TYPE B220

PART NUMBER:
TAV220