TAV750 Rear underrun protection device
TAV214 Mounting plate for TAV200/TAV220 Drawbeam
Installation instructions

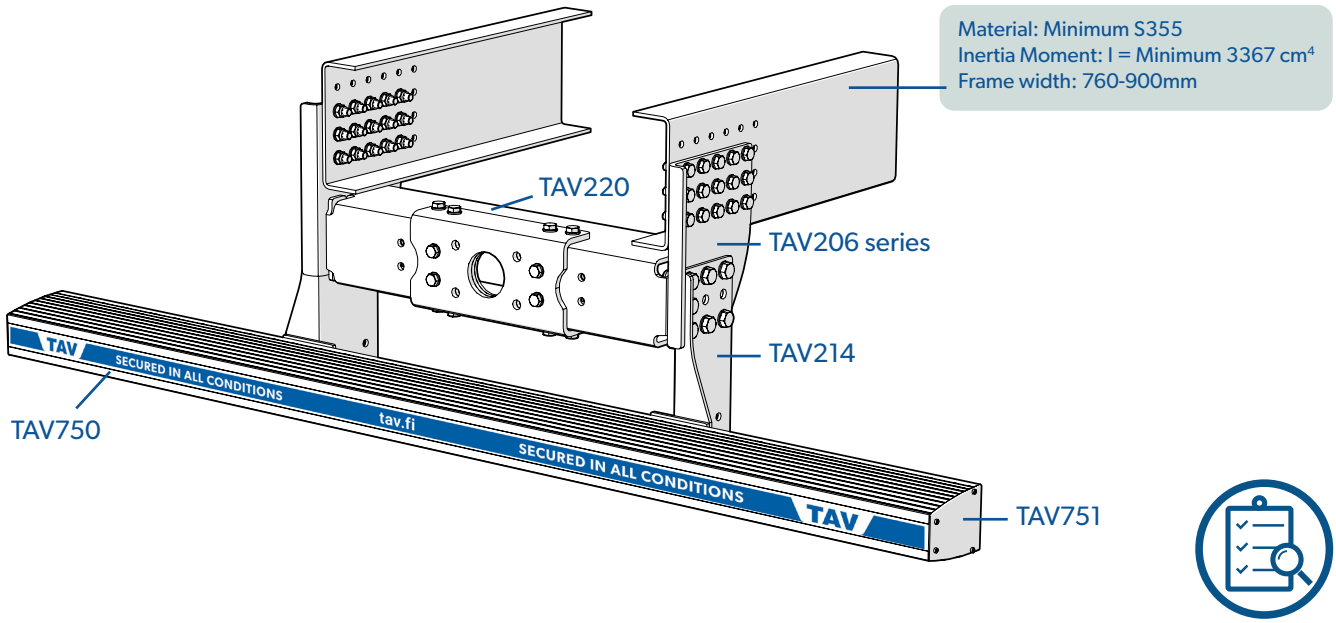

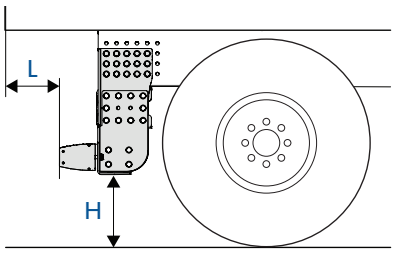

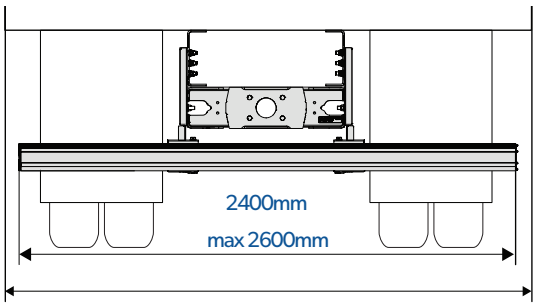

Vehicle category	L
N3	Max. 300mm
O4	Max. 192mm
O4 platform lift or tipping-trailer	Max. 300mm

Vehicle category	Suspension	H
N3 & O4	Pneumatic suspension	Max. 450mm
N3	Leaf spring suspension	Max. 500mm
O4	Other suspension	Max. 500mm or max. 8° departure angle

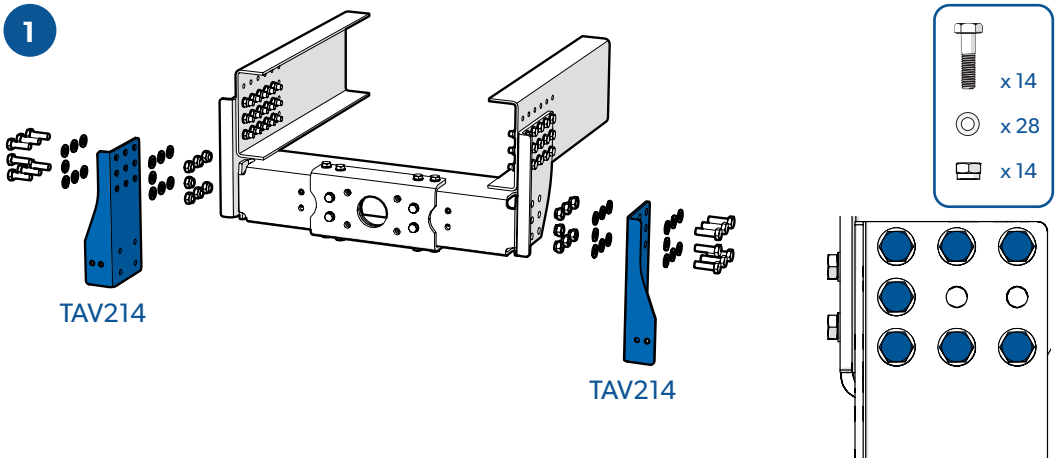

570Nm
Tighten with torque wrench

M. KORTE OY 2023 © all rights reserved

2

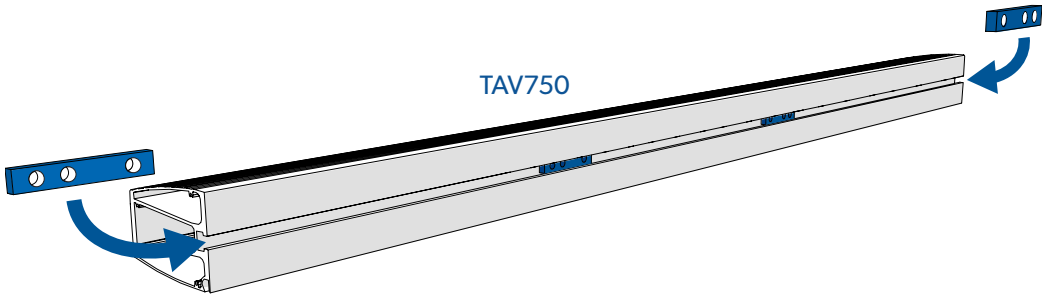

3

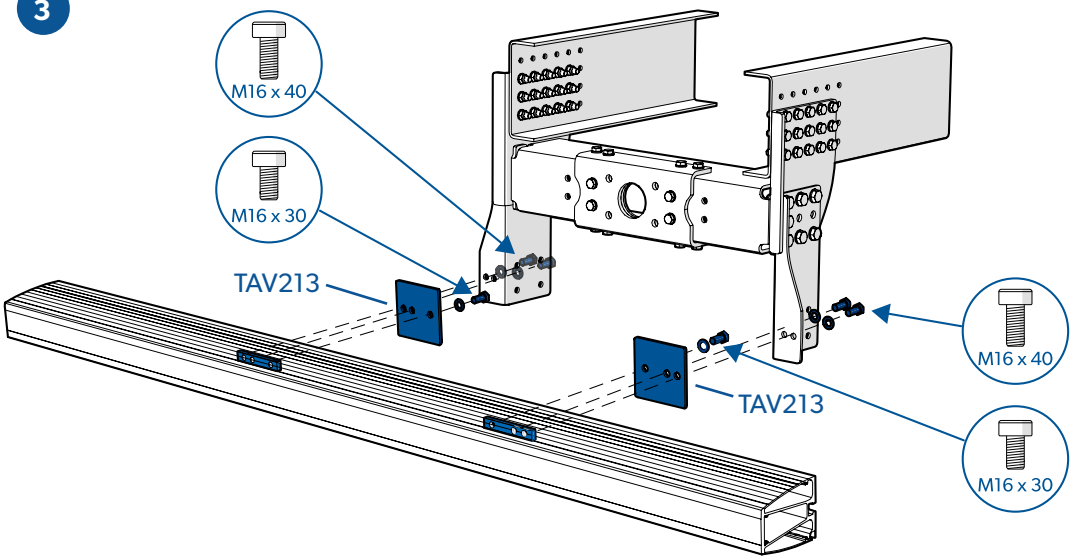

TAV213
x 4 M16 x 40
x 2 M16 x 30
x 6

150Nm
Tighten with torque wrench

Optional:
TAV754 spacer

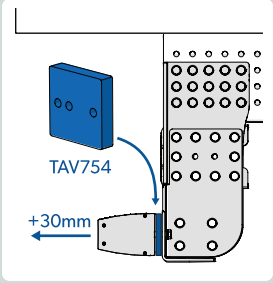

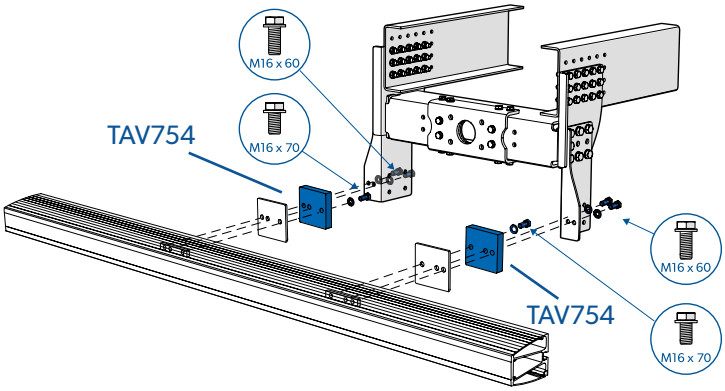

TAV754
x 4 M16 x 60
x 2 M16 x 70
x 6

4

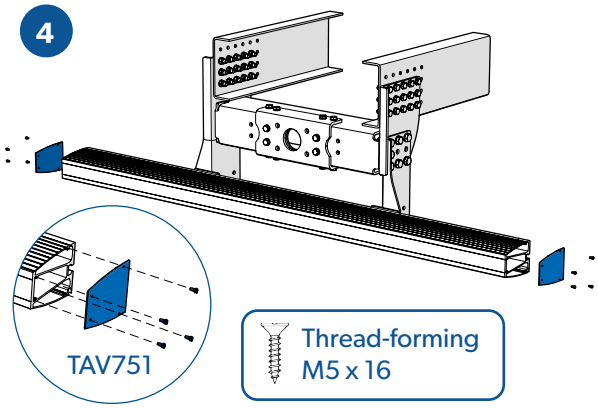

Thread-forming
M5 x 16

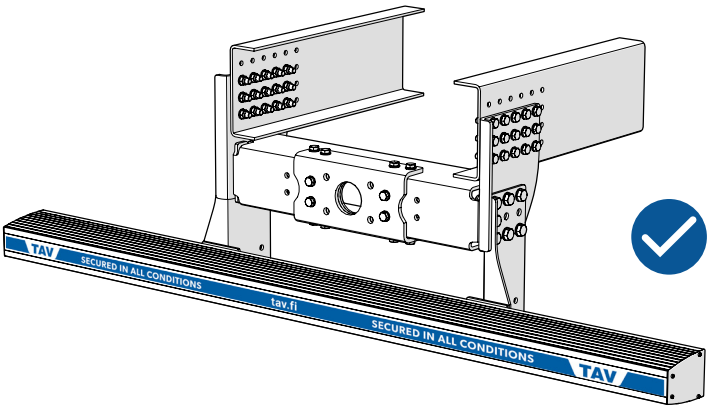

M. KORTE OY 2023 © all rights reserved